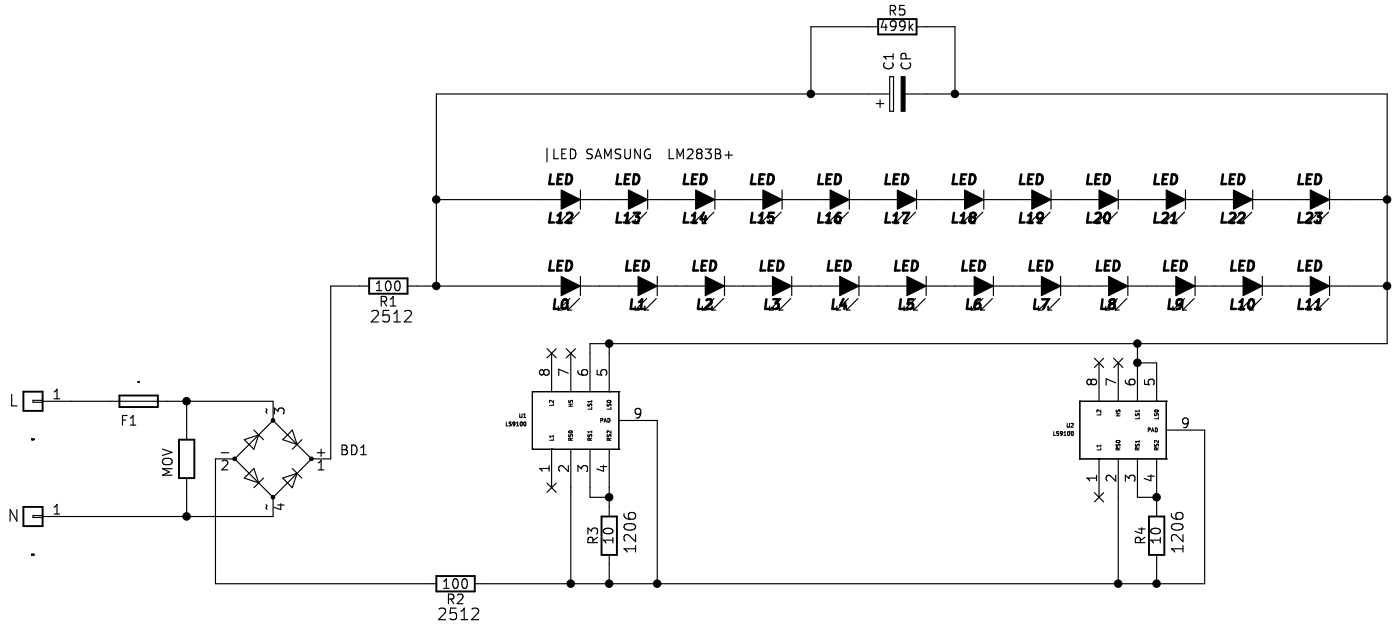

LSI/CSI

Sheet: /
File: 4_ceiling.sch

Title: 17W LS9100X base LED Engine

Size: A4	Date: 2021-8-15	Rev: B
LSI/CSI a Semiconductor Company		Id: 1/1